# Improved Methods for Predicting Elevated Transit Noise

**TRB ADC 40 Winter Meeting**
**January 11, 2009**
**Washington D.C.**

Kevin Keller, PB

# Elevated Platform

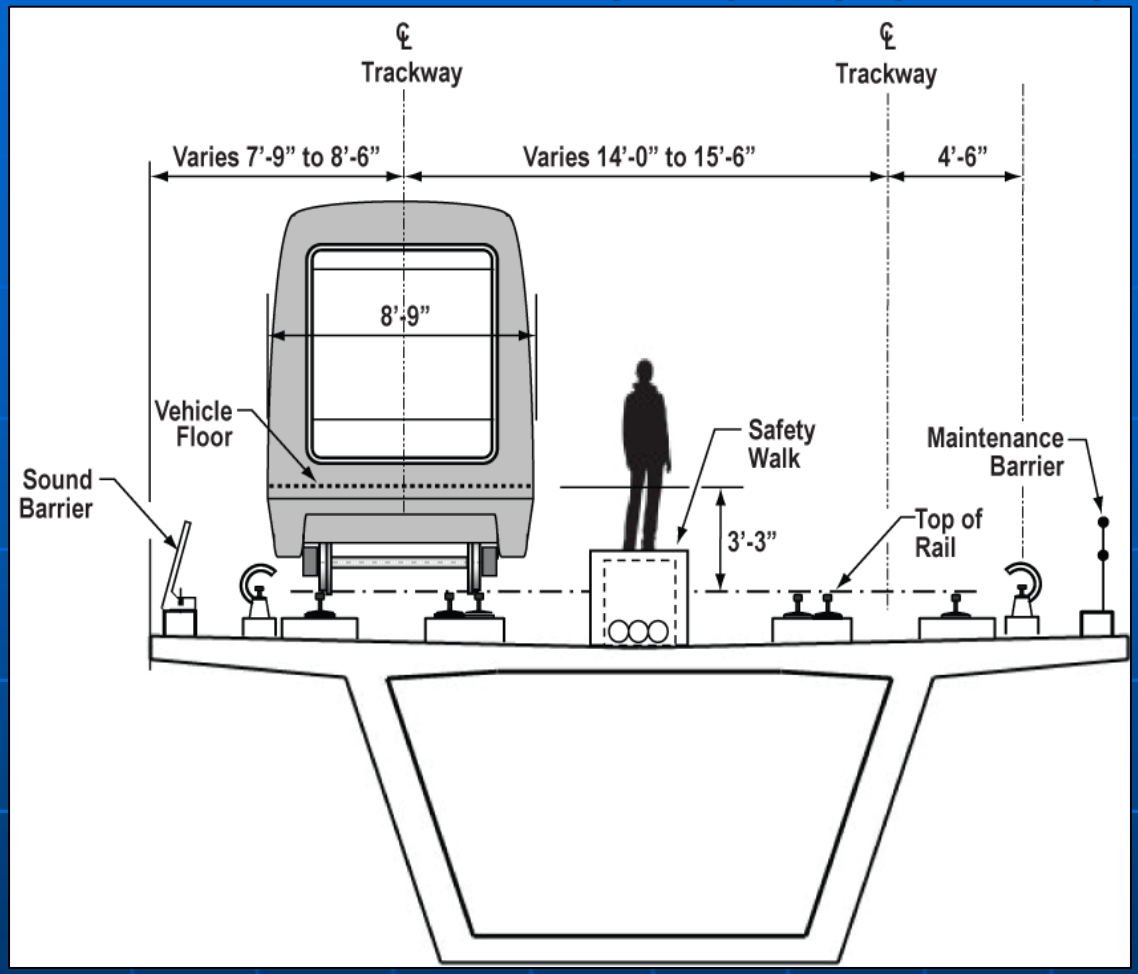


Platform 30 to 33 feet wide

Center Line of Near Track 8 feet from edge of platform

Center line of Far Track 24 feet from edge of platform

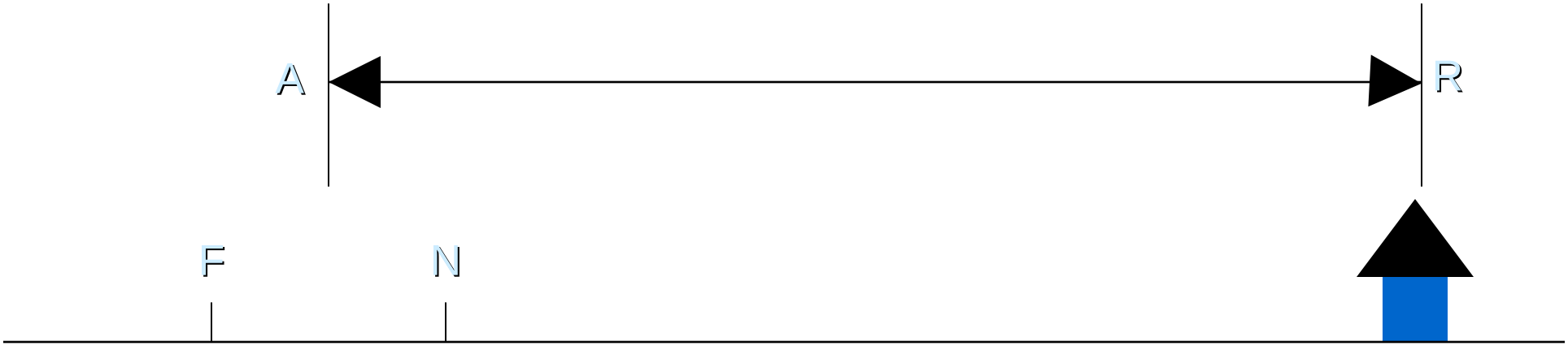
A
R
F
N

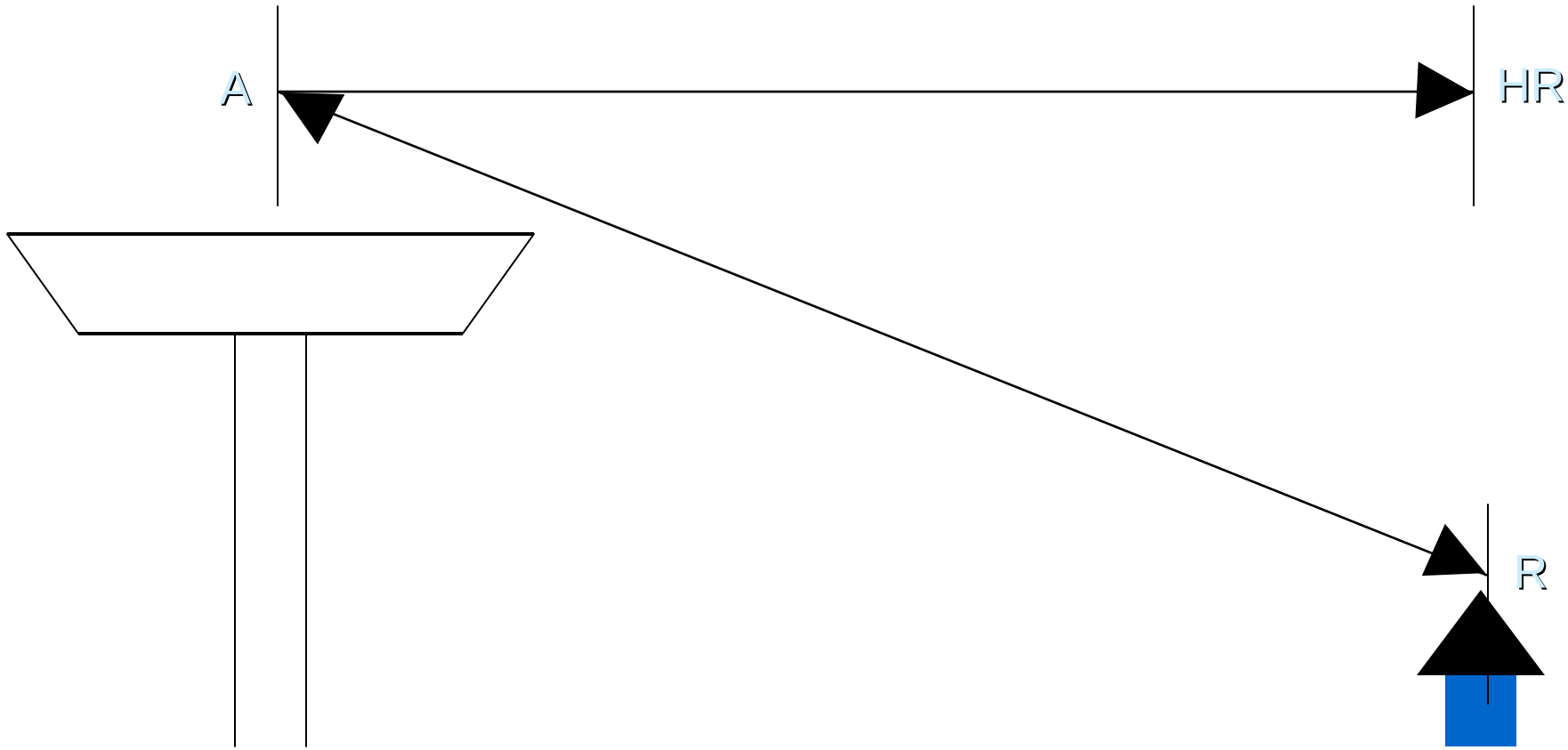
A
HR
R

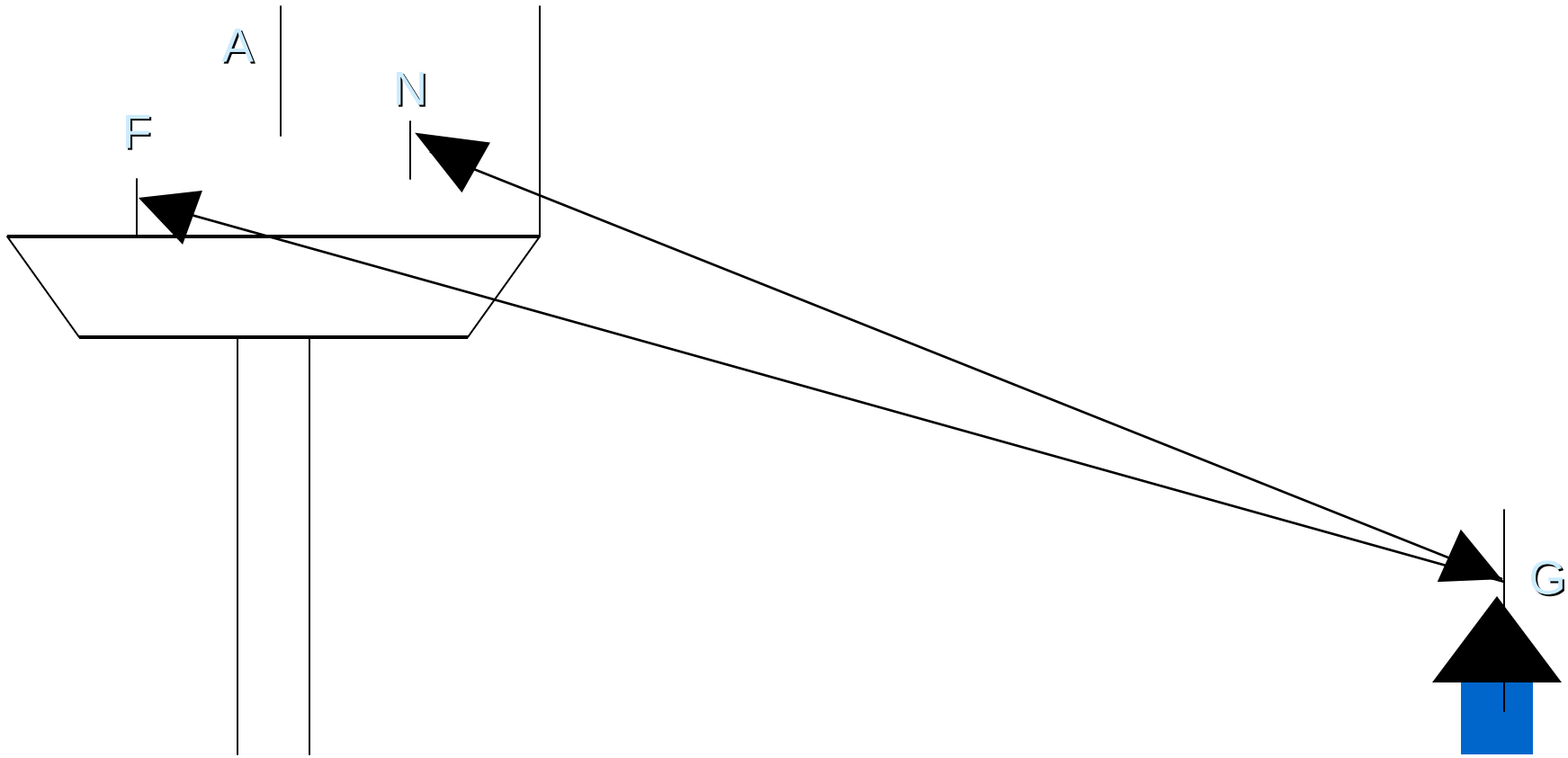
A
N
F
G

Calculating the noise levels from the center line of the structure (34 feet) (35 feet high) and combine the traffic(20 trains daytime and 8 trains nighttime) at 45 mph, gave the following noise levels;

| Noise Levels at Edge of Receiver | Leq-Day | Leq-Night | LDN |
|---|---|---|---|
| Total Noise using one noise source at centerline. | 63 | 59 | 66 |

Calculating the noise levels by splitting the traffic to near and far track, using the following:
Far Side – 24 feet from edge of structure, 41 feet from receiver.
Near Side – 8 feet from edge of structure, 27 feet from receiver.
Traffic – 10 trains per direction day time, 4 per direction nighttime, 45 MPH.

| Noise Levels at Edge of Structure | Leq-Day | Leq-Night | LDN |
|---|---|---|---|
| Near Side | 70.1 | 66.8 | 74 |
| Far Side | 61.1 | 57.2 | 64.4 |

| Noise Levels at Receiver | Leq-Day | Leq-Night | LDN |
|---|---|---|---|
| Near Side | 61.8 | 57.8 | 65 |
| Far Side | 56.8 | 52.8 | 60.1 |

| | Leq-Day | Leq-Night | LDN |
|---|---|---|---|
| Total noise using near and far sources | 63 | 59 | 66 |

- How to address the shield provided by the solid platform?

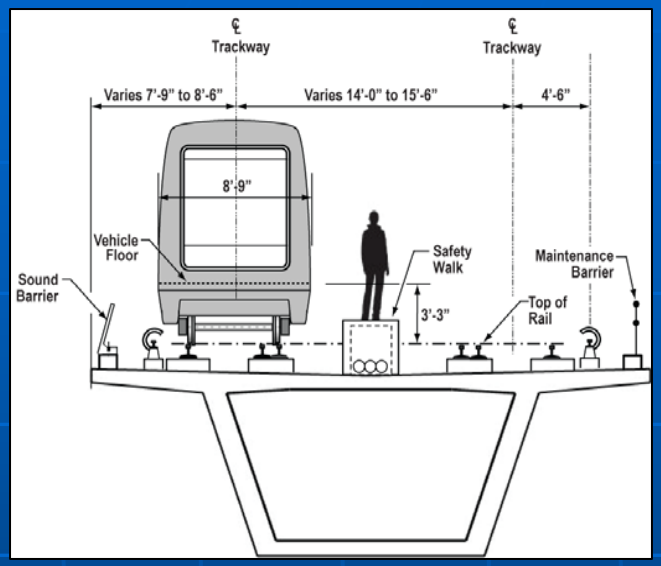


- Two suggestions
- Use FHWA TNM 2.5 Highway Traffic Noise Model
- Treat the platform as barrier and calculate insertion loss using path length difference between straight line path and path over platform

# TNM 2.5 Method

- TNM is a highway noise model, has no reference for Transit Vehicles
- Calibrate a User Defined Vehicles using FTA spreadsheet as reference.
- Calibration done in flat world setting.
- TNM vehicle type that gave best match to LRT noise propagation was Motorcycle

# TNM Calibration

| TNM Ref Level = 81.1 over Loose Soil 50% Hum 68 deg for 55 MPH - Roadway 4 foot wide | | | | | | | | | | |
|---|---|---|---|---|---|---|---|---|---|---|
| Distance | FTA 2 Events at 55 MPH | TNM 2 Vech at 25 Mph | FTA 4 Events at 55 MPH | TNM 4 Vech at 25 Mph | FTA 6 Event at 55 MPH | TNM 6 Vech at 25 Mph | FTA 10 Events at 55 MPH | **TNM 10 Vech at 25 Mph** | FTA 20 Events at 55 MPH | TNM 20 Vech at 25 Mph |
| 25 | 59.5 | 59.8 | 62.5 | 62.8 | 64.3 | 64.5 | 66.5 | **66.7** | 69.5 | 69.8 |
| 50 | 55.2 | 55 | 58 | 58 | 59.8 | 59.7 | 62 | **62** | 65 | 65 |
| 75 | 52.4 | 52.4 | 55.4 | 55.4 | 57.1 | 57.2 | 59.4 | **59.4** | 62.4 | 62.4 |
| 100 | 50.5 | 50.7 | 53.5 | 53.7 | 55.3 | 55.5 | 57.5 | **57.7** | 60.5 | 60.4 |
| 200 | 46 | 46.5 | 49 | 49.5 | 50.7 | 51.2 | 53 | **53.5** | 56 | 56.5 |

| TNM Ref Level = 81.1 over Loose Soil 50% Hum 68 deg for 50 MPH - Roadway 4 foot wide | | | | | | | | | | |
|---|---|---|---|---|---|---|---|---|---|---|
| Distance | FTA 2 Events at 50 MPH | TNM 2 Vech at 30 Mph | FTA 4 Events at 50 MPH | TNM 4 Vech at 30 Mph | FTA 6 Event a 50 MPH | TNM 6 Vech at 30 Mph | FTA 10 Events at 50 MPH | **TNM 10 Vech at 30 Mph** | FTA 20 Events at 50 MPH | TNM 20 Vech at 30 Mph |
| 25 | 58.7 | 59 | 61.7 | 62 | 63.5 | 63.7 | 65.7 | **65.9** | 68.7 | 69 |
| 50 | 54.2 | 54.2 | 57.2 | 57.2 | 59 | 58.9 | 61.2 | **61.2** | 64.2 | 64.2 |
| 75 | 51.5 | 51.6 | 54.6 | 54.7 | 56.3 | 56.4 | 58.5 | **58.6** | 61.5 | 61.7 |
| 100 | 49.7 | 49.9 | 52.7 | 52.9 | 54.5 | 54.7 | 56.7 | **56.9** | 59.7 | 59.9 |
| 200 | 45.2 | 45.7 | 48.2 | 48.7 | 49.9 | 50.5 | 52.2 | **52.7** | 55.2 | 55.7 |

| TNM Ref Level = 81.1 over Loose Soil 50% Hum 68 deg for 45 MPH - Roadway 4 foot wide | | | | | | | | | | |
|---|---|---|---|---|---|---|---|---|---|---|
| Distance | FTA 2 Events at 45 MPH | TNM 2 Vech at 37 Mph | FTA 4 Events at 45 MPH | TNM 4 Vech at 37 Mph | FTA 6 Event at 45 MPH | TNM 6 Vech at 37 Mph | FTA 10 Events at 45 MPH | **TNM 10 Vech at 37 Mph** | FTA 20 Events at 45 MPH | TNM 20 Vech at 37 Mph |
| 25 | 57.8 | 58 | 60.8 | 61 | 62.6 | 62.8 | 64.8 | **65** | 67.8 | 68 |
| 50 | 53.3 | 53.3 | 56.3 | 56.3 | 58 | 58 | 60.3 | **60.3** | 63.3 | 63.3 |
| 75 | 50.6 | 50.7 | 53.6 | 53.7 | 55.4 | 55.5 | 57.6 | **57.7** | 60.6 | 60.7 |
| 100 | 48.8 | 49 | 51.8 | 52 | 53.5 | 53.8 | 55.7 | **56** | 58.8 | 59 |
| 200 | 44.2 | 44.8 | 47.2 | 47.8 | 49 | 49.6 | 51.2 | **51.8** | 54.2 | 54.8 |

# Elevated TNM

| | TNM Ref Level = 81.1 over Loose Soil 50% Hum 68 deg for 55 MPH | | | | | | | | | | |
|---|---|---|---|---|---|---|---|---|---|---|---|
| Distance from CL | FTA 10 Events at 55 MPH at Ground Level | TNM Ground 10 Events | TNM Near Track Ground | TNM Far Track Ground | FTA 10 events Elevated 25 Ft | 10 TNM Events Elevated 25 feet | **Elevated FTA - Elevated TNM** | TNM Near Track Elevated | TNM Far Track Elevated | Insertion Loss from Platform-Near Track | Insertion Loss from Platform-Far Track |
| 25 | 67.4 | 66.7 | 65.2 | 61.4 | 64.3 | 60.8 | **3.5** | 60.5 | 48.8 | 4.7 | 12.6 |
| 50 | 62 | 62 | 59.8 | 57.9 | 61.3 | 57.3 | **4** | 56.5 | 49.7 | 3.3 | 8.2 |
| 75 | 59.4 | 59.4 | 57 | 55.8 | 59 | 56.1 | **2.9** | 54.7 | 52 | 2.3 | 3.8 |
| 100 | 57.5 | 57.7 | 55.1 | 54.2 | 57.3 | 55.8 | **1.5** | 53.5 | 52 | 1.6 | 2.2 |
| 200 | 53 | 53.5 | 50.5 | 50.4 | 52.9 | 52.8 | **0.1** | 50.5 | 48.8 | 0 | 1.6 |

| | TNM Ref Level = 81.1 over Loose Soil 50% Hum 68 deg for 50 MPH | | | | | | | | | | |
|---|---|---|---|---|---|---|---|---|---|---|---|
| Distance from CL | FTA 20 Events at 50 MPH at Ground Level | TNM Ground 20 Events | TNM Near Track Ground | TNM Far Track Ground | FTA 20 events Elevated 25 Ft | TNM Elevated 25 feet | **Elevated FTA - Elevated TNM** | TNM Near Track Elevated | TNM Far Track Elevated | Insertion Loss from Platform-Near Track | Insertion Loss from Platform-Far Track |
| 25 | 68.7 | 69 | 67.4 | 63.6 | 66.5 | 63 | **3.5** | 62.7 | 51 | 4.7 | 12.6 |
| 50 | 64.2 | 64.2 | 62 | 60.1 | 63.4 | 59.5 | **3.9** | 58.7 | 51.9 | 3.3 | 8.2 |
| 75 | 61.5 | 61.7 | 59.2 | 58 | 61.2 | 58.3 | **2.9** | 57 | 52.5 | 2.2 | 5.5 |
| 100 | 59.7 | 59.9 | 57.3 | 56.4 | 59.5 | 58 | **1.5** | 55.7 | 54.2 | 1.6 | 2.2 |
| 200 | 55.2 | 55.7 | 52.8 | 52.6 | 55.1 | 55 | **0.1** | 52.8 | 51 | 0 | 1.6 |

| | TNM Ref Level = 81.1 over Loose Soil 50% Hum 68 deg for 45 MPH | | | | | | | | | | |
|---|---|---|---|---|---|---|---|---|---|---|---|
| Distance from CL | FTA 2 Events at 45 MPH at Ground Level | TNM Ground 20 Events | TNM Near Track Ground | TNM Far Track Ground | FTA 2 events Elevated 25 Ft | TNM Elevated 25 feet | **Elevated FTA - Elevated TNM** | TNM Near Track Elevated | TNM Far Track Elevated | Insertion Loss from Platform-Near Track | Insertion Loss from Platform-Far Track |
| 25 | 57.8 | 58 | 56.5 | 52.7 | 55.6 | 52.1 | **3.5** | 51.8 | 40.1 | 4.7 | 12.6 |
| 50 | 53.3 | 53.3 | 51.1 | 49.2 | 52.5 | 48.6 | **3.9** | 47.8 | 41 | 3.3 | 8.2 |
| 75 | 50.6 | 50.7 | 48.3 | 47.1 | 50.3 | 47.4 | **2.9** | 46 | 41.5 | 2.3 | 5.6 |
| 100 | 48.8 | 49 | 46.4 | 45.5 | 48.6 | 47.1 | **1.5** | 44.8 | 43.3 | 1.6 | 2.2 |
| 200 | 44.2 | 44.8 | 41.9 | 41.7 | 44.2 | 44.1 | **0.1** | 41.9 | 40.1 | 0 | 1.6 |

Calculating the noise levels from the center line of the structure (34 feet) (35 feet high) and combine the traffic (20 trains daytime and 8 trains nighttime) at 45 mph, gave the following noise levels;

## FTA Spreadsheet Results

| | Leq-Day | Leq-Night | LDN |
|---|---|---|---|
| **Total Noise using one noise source at centerline.** | **63** | **59** | **66** |

## TNM Model Results

| | Leq-Day | Leq-Night | LDN |
|---|---|---|---|
| **TNM Modeling** | **59.6** | **55.7** | **62.9** |

Treat the platform as barrier and calculate insertion loss using path length difference between straight line path and path over platform

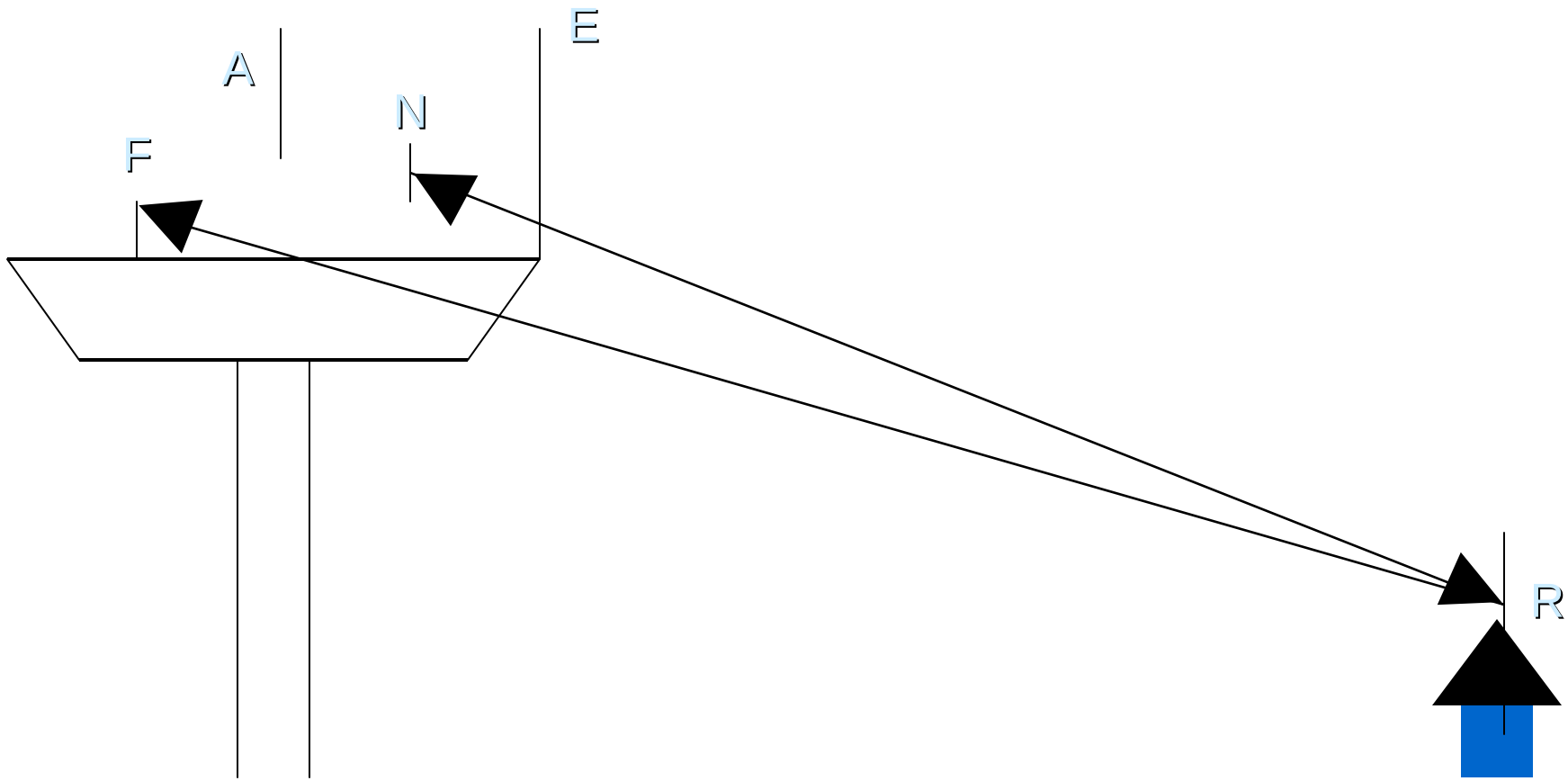

Treat the platform as barrier and calculate insertion loss using path length difference between straight line path and path over platform

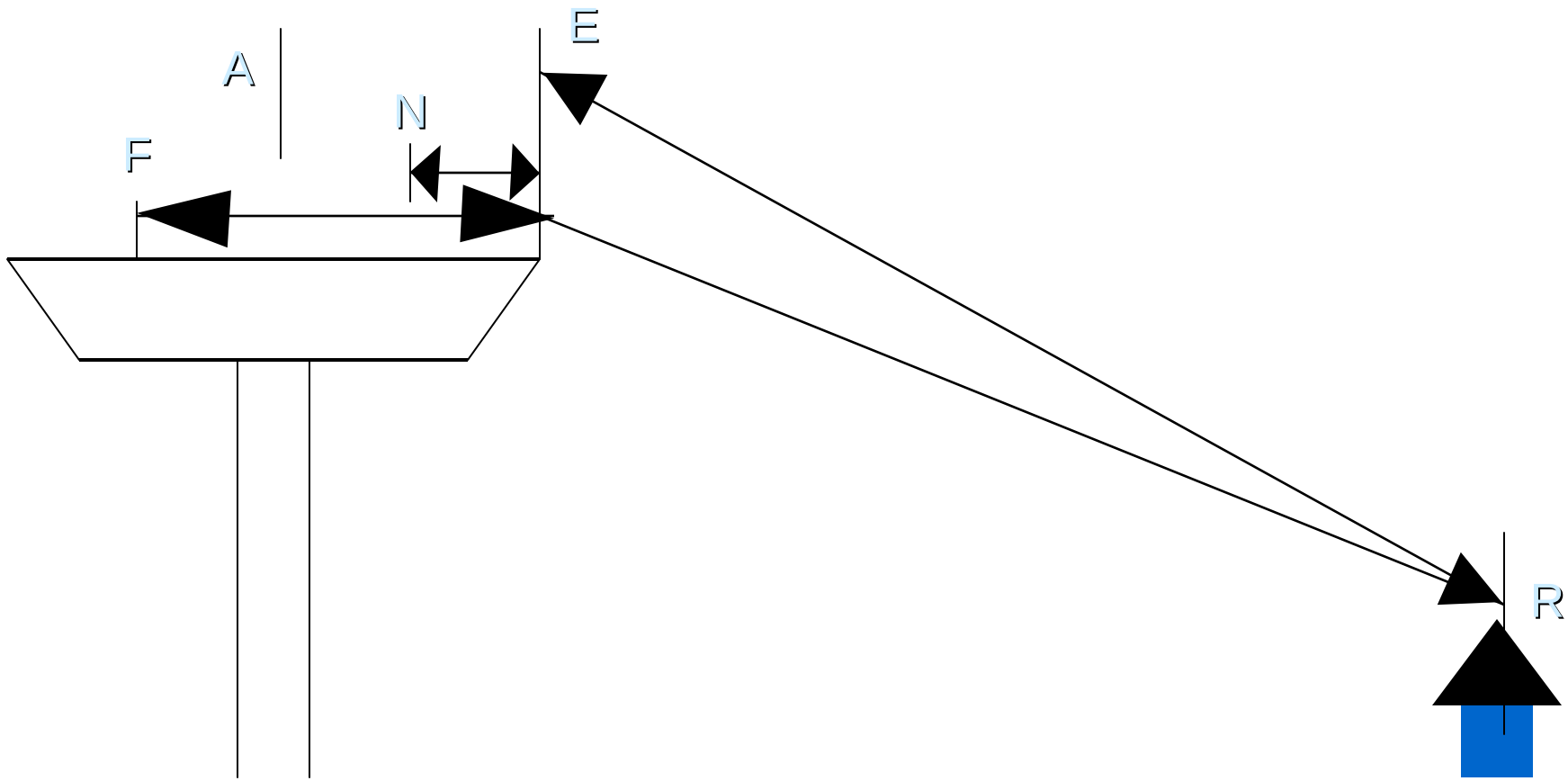

# FTA Path Length Calculation
# F to E to R and N to E to R

| | | | | 10 Events at 55 MPH | | | | | |
|---|---|---|---|---|---|---|---|---|---|
| Distance from CL | FTA 10 Events at 55 MPH without platform | FTA Near Track Level without Platform | FTA Far Track without Platform | FTA 10 Events at 55 MPH with platform | FTA Near Track Level with Platform | FTA Far Track with Platform | **Total Insertion Loss from Platform** | Insertion Loss from Platform-Near Track | Insertion Loss from Platform-Far Track |
| 25 | 64.4 | 62.3 | 60.3 | 63.3 | 61.3 | 58.9 | **1.1** | 1 | 1.4 |
| 50 | 61.4 | 59.1 | 57.5 | 61.2 | 59 | 57.2 | **0.2** | 0.1 | 0.3 |
| 75 | 59.1 | 56.6 | 55.4 | 59 | 56.6 | 55.3 | **0.1** | 0 | 0.1 |
| 100 | 57.3 | 54.8 | 53.8 | 57.3 | 54.8 | 53.7 | **0** | 0 | 0.1 |
| 200 | 52.9 | 50.2 | 49.7 | 52.9 | 50.2 | 49.6 | **0** | 0 | 0.1 |

| | | | | 20 Events at 50 MPH | | | | | |
|---|---|---|---|---|---|---|---|---|---|
| Distance from CL | FTA 20 Events at 50 MPH without platform | FTA Near Track Level without Platform | FTA Far Track without Platform | FTA 20 Events at 50 MPH with platform | FTA Near Track Level with Platform | FTA Far Track with Platform | **Total Insertion Loss from Platform** | Insertion Loss from Platform-Near Track | Insertion Loss from Platform-Far Track |
| 25 | 66.6 | 64.5 | 62.5 | 65.4 | 63.5 | 61 | **1.2** | 1 | 1.5 |
| 50 | 63.6 | 61.3 | 59.7 | 63.4 | 61.2 | 59.4 | **0.2** | 0.1 | 0.3 |
| 75 | 61.2 | 58.8 | 57.6 | 61.2 | 58.8 | 57.5 | **0** | 0 | 0.1 |
| 100 | 59.5 | 57 | 56 | 59.5 | 57 | 55.9 | **0** | 0 | 0.1 |
| 200 | 55.1 | 52.3 | 51.9 | 55.1 | 52.3 | 51.8 | **0** | 0 | 0.1 |

| | | | | 2 Events at 45 MPH | | | | | |
|---|---|---|---|---|---|---|---|---|---|
| Distance from CL | FTA 2 Events at 45 MPH without platform | FTA Near Track Level without Platform | FTA Far Track without Platform | FTA 2 Events at 45 MPH with platform | FTA Near Track Level with Platform | FTA Far Track with Platform | **Total Insertion Loss from Platform** | Insertion Loss from Platform-Near Track | Insertion Loss from Platform-Far Track |
| 25 | 55.7 | 53.6 | 51.5 | 54.5 | 52.6 | 50.1 | **1.2** | 1 | 1.4 |
| 50 | 52.7 | 50.4 | 48.8 | 52.5 | 50.3 | 48.4 | **0.2** | 0.1 | 0.4 |
| 75 | 50.3 | 47.9 | 46.6 | 50.3 | 47.9 | 46.6 | **0** | 0 | 0 |
| 100 | 48.6 | 46.1 | 45.1 | 48.6 | 46.1 | 45 | **0** | 0 | 0.1 |
| 200 | 44.2 | 41.4 | 40.9 | 44.2 | 41.4 | 40.9 | **0** | 0 | 0 |

# FTA Platform as Barrier Insertion Loss

$A_{barrier}$ = min {12or[5.3xlog(P)+6.7]}

P = F to E to G – F to G (Far Track)

N to E to G – N to G (Near Track)

Barrier Insertion Loss = max {0 or [$A_{barrier}$ – 10($G_{nb}$ – $G_B$) log (D/50)]}

# FTA with Platform as Barrier

| | | | | 10 Events at 55 MPH | | | | | |
|---|---|---|---|---|---|---|---|---|---|
| Distance from CL | FTA 10 Events at 55 MPH without platform | FTA Near Track Level without Platform | FTA Far Track without Platform | FTA 10 Events at 55 MPH with platform as barrier | FTA Near Track Level with Platform as Barrier | FTA Far Track with Platform as Barrier | **Total Insertion Loss from Platform as Barrier** | Insertion Loss from Platform as Barrier-Near Track | Insertion Loss from Platform as Barrier - Far Track |
| 25 | 64.4 | 62.3 | 60.3 | 55.7 | 53.9 | 51.0 | **8.7** | 8.4 | 9.3 |
| 50 | 61.4 | 59.1 | 57.5 | 54.0 | 52.1 | 49.5 | **7.4** | 7 | 8 |
| 75 | 59.1 | 56.6 | 55.4 | 52.6 | 50.6 | 48.3 | **6.5** | 6 | 7.1 |
| 100 | 57.3 | 54.8 | 53.8 | 51.6 | 49.5 | 47.4 | **5.7** | 5.3 | 6.4 |
| 200 | 52.9 | 50.2 | 49.7 | 48.8 | 46.6 | 44.9 | **4.1** | 3.6 | 4.8 |

| | | | | 20 Events at 50 MPH | | | | | |
|---|---|---|---|---|---|---|---|---|---|
| Distance from CL | FTA 20 Events at 50 MPH without platform | FTA Near Track Level without Platform | FTA Far Track without Platform | FTA 20 Events at 50 MPH with platform | FTA Near Track Level with Platform as Barrier | FTA Far Track with Platform as Barrier | **Total Insertion Loss from Platform as Barrier** | Insertion Loss from Platform as Barrier-Near Track | Insertion Loss from Platform as Barrier - Far Track |
| 25 | 66.6 | 64.5 | 62.5 | 57.9 | 56.1 | 53.2 | **8.7** | 8.4 | 9.3 |
| 50 | 63.6 | 61.3 | 59.7 | 56.2 | 54.3 | 51.7 | **7.4** | 7 | 8 |
| 75 | 61.2 | 58.8 | 57.6 | 54.8 | 52.8 | 50.5 | **6.4** | 6 | 7.1 |
| 100 | 59.5 | 57 | 56 | 53.8 | 51.7 | 49.6 | **5.7** | 5.3 | 6.4 |
| 200 | 55.1 | 52.3 | 51.9 | 51.0 | 48.7 | 47.1 | **4.1** | 3.6 | 4.8 |

| | | | | 2 Events at 45 MPH | | | | | |
|---|---|---|---|---|---|---|---|---|---|
| Distance from CL | FTA 2 Events at 45 MPH without platform | FTA Near Track Level without Platform | FTA Far Track without Platform | FTA 2 Events at 45 MPH with platform | FTA Near Track Level with Platform as Barrier | FTA Far Track with Platform as Barrier | **Total Insertion Loss from Platform as Barrier** | Insertion Loss from Platform as Barrier-Near Track | Insertion Loss from Platform as Barrier - Far Track |
| 25 | 55.7 | 53.6 | 51.5 | 47.0 | 45.2 | 42.2 | **8.7** | 8.4 | 9.3 |
| 50 | 52.7 | 50.4 | 48.8 | 45.3 | 43.4 | 40.8 | **7.4** | 7 | 8 |
| 75 | 50.3 | 47.9 | 46.6 | 43.9 | 41.9 | 39.5 | **6.4** | 6 | 7.1 |
| 100 | 48.6 | 46.1 | 45.1 | 42.9 | 40.8 | 38.7 | **5.7** | 5.3 | 6.4 |
| 200 | 44.2 | 41.4 | 40.9 | 40.0 | 37.8 | 36.1 | **4.2** | 3.6 | 4.8 |

Calculating the noise levels from the center line of the structure (34 feet) (35 feet high) and combine the traffic(20 trains daytime and 8 trains nighttime) at 45 mph, gave the following noise levels;

| Noise Levels at Edge of Receiver | Leq-Day | Leq-Night | LDN |
|---|---|---|---|
| Total Noise using one noise source at centerline. | 63 | 59 | 66 |

Calculating the noise levels by splitting the traffic to near and far track, using path over platform:
Far Side – 24 feet from edge of structure, 41 feet from receiver.
Near Side – 8 feet from edge of structure, 27 feet from receiver.
Traffic – 10 trains per direction day time, 4 per direction nighttime, 45 MPH.

| Noise Levels at Receiver | Leq-Day without Platform | I.L. | Leq-Day with Platform as Barrier | Leq-Night without Platform | I.L. | Leq-Night with Platform as Barrier |
|---|---|---|---|---|---|---|
| Near Side | 60.9 | 8.2 | 52.7 | 57.0 | 8.2 | 48.8 |
| Far Side | 59.7 | 9.2 | 50.2 | 55.4 | 9.2 | 46.2 |

| Platform as Barrier | Leq-Day | Leq-Night | LDN |
|---|---|---|---|
| Total noise using near and far sources | 55 | 51 | 57 |

# Recommendations

- Use FTA Method- Use path length Difference between F/N to G and F/N to E to G, to use platform as a barrier.
- Need to Field Test.

# Future Study

3d Modeling Using SoundPlan

Modeling Each Track as a Noise Source

# SoundPlan to FTA

| SoundPLAN Level at 500 HZ for 55 MPH = 97.3 | | | | | | | | |
|---|---|---|---|---|---|---|---|---|
| Distance | FTA 1 Event at 55 | 1 Event Sound Power Level at 97.1 | FTA 2 Events at 55 | 2 Events Sound Power Level at 97.1 | FTA 5 Event at 55 | 5 Events Sound Power Level at 97.1 | **FTA 10 Events at 55** | **10 Events Sound Power Level at 97.1** |
| 25 | 56.5 | 56.9 | 59.5 | 59.9 | 63.5 | 63.8 | **66.5** | **66.9** |
| 50 | 52 | 52 | 55 | 55 | 59 | 59 | **62** | **62** |
| 75 | 49.4 | 49.2 | 52.4 | 52.2 | 56.3 | 56.2 | **59.4** | **59.2** |
| 100 | 47.5 | 47.5 | 50.5 | 50.5 | 54.5 | 54.5 | **57.5** | **57.5** |
| 200 | 43 | 43.8 | 46 | 46.8 | 50 | 50.8 | **53** | **53.8** |

| SoundPLAN Level at 500 HZ for 50 MPH = 96.24 | | | | | | | | |
|---|---|---|---|---|---|---|---|---|
| Distance | FTA 1 Event at 50 | 1 Event Sound Power Level at 96.24 | FTA 2 Events at 50 | 2 Events Sound Power Level at 96.24 | FTA 5 Event a 50 | 5 Events Sound Power Level at 96.24 | **FTA 10 Events at 50** | **10 Events Sound Power Level at 96.24** |
| 25 | 55.7 | 56 | 58.7 | 59 | 62.7 | 62.9 | **65.7** | **66** |
| 50 | 51.2 | 51.2 | 54.2 | 54.2 | 58.2 | 58.2 | **61.2** | **61.2** |
| 75 | 48.5 | 48.3 | 51.5 | 51.3 | 55.5 | 55.3 | **58.5** | **58.3** |
| 100 | 46.7 | 46.6 | 49.7 | 49.6 | 53.6 | 53.6 | **56.7** | **56.6** |
| 200 | 42.1 | 42.9 | 45.2 | 45.9 | 49.1 | 49.9 | **52.1** | **52.9** |

| SoundPLAN Level at 500 HZ for 45 MPH = 95.35 | | | | | | | | |
|---|---|---|---|---|---|---|---|---|
| Distance | FTA 1 Event at 45 | 1 Event Sound Power Level at 95.35 | FTA 2 Events at 45 | 2 Events Sound Power Level at 95.35 | FTA 5 Event at 45 | 5 Events Sound Power Level at 95.35 | **FTA 10 Events at 45** | **10 Events Sound Power Level at 95.35** |
| 25 | 54.8 | 55.1 | 57.8 | 58.1 | 61.8 | 62.1 | **64.8** | **65.1** |
| 50 | 50.3 | 50.3 | 53.3 | 53.3 | 57.2 | 57.3 | **60.3** | **60.3** |
| 75 | 47.6 | 47.4 | 50.6 | 50.5 | 54.6 | 54.4 | **57.6** | **57.4** |
| 100 | 45.7 | 45.7 | 48.8 | 48.8 | 52.7 | 52.7 | **55.7** | **55.7** |
| 200 | 41.2 | 42 | 44.2 | 45 | 48.2 | 49 | **51.2** | **52** |

# Questions